Klaes 3D

THE COMPLETE SOLUTION FOR CONSERVATORIES AND FACADES FOR ALL MATERIAL AND PROFILE TYPES

Englisch • English

# Klaes 3D – One solution for EVERYTHING

You surely know this problem: constructing a facade or a conservatory can be very time-consuming, even during tender preparation. And once you receive the offer you also receive requests for changes! At worst, changing the inclination of the roof can mean starting the construction from scratch.

Not anymore! Klaes 3D allows you to construct, present, calculate and produce facades and conservatories as 'easily' as windows. It does not even require comprehensive knowledge of 3D or CAD packages. During the development of Klaes 3D we paid a lot of attention to the specific needs and requirements of façade and conservatory manufacturers.

Klaes 3D calculates all manufacturing data (such as glass and profile lists as well as required cut data) with the precision of a Swiss clockwork. Sectional drawings are created automatically, including dimensioning and your project is calculated in great detail.

But what if things need to be changed on short notice? No problem at all! Just go ahead and adjust the construction and watch Klaes 3D calculate and display your changes upon a single click of your mouse. Dimensions, angles, surface division as well as sectional drawings can be changed until the very last minute to meet individual customer specifications.

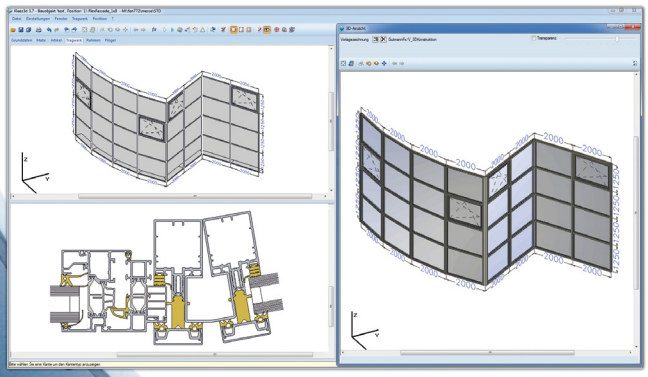

Facade elements are an inherent part of modern architecture. Complex mullion-transom-facades can be constructed in Klaes 3D with ease. Klaes 3D provides you with any production documents and detailed sectional drawings as well as expressive elevations.

# The work shop on your screen

Using Klaes 3D you can construct facades and conservatories that match the actual objects 100% directly on your screen. With Klaes 3D erecting the actual objects in your work shop becomes unnecessary!

Klaes 3D follows the philosophy to 'visualize and parameterize' your data. Cut lengths and angles of all profiles and panes are adjusted to changes in the construction automatically and the results are displayed instantly. Nodes and edges may be displayed and checked in detail using sectional drawings or the 3D elevation. This truly makes Klaes 3D an onscreen work shop.

Image: Renaltner

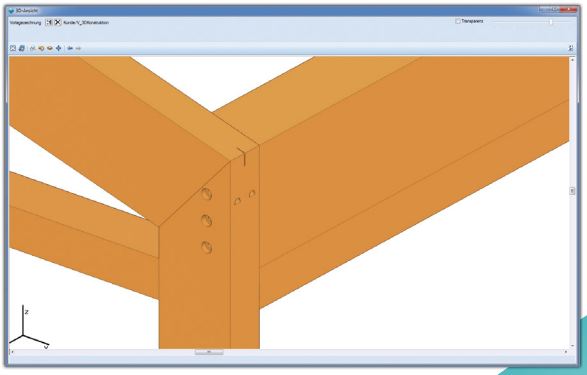

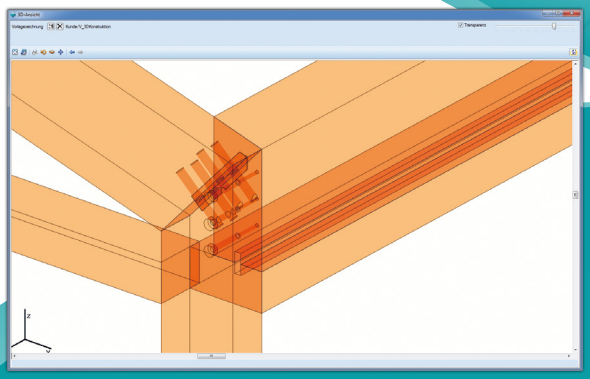

All kinds of processings can be displayed and checked on your screen instantaneously.

Klaes 3D

# Freely combine all types of materials

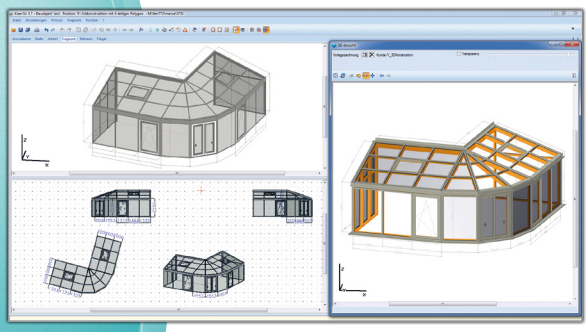

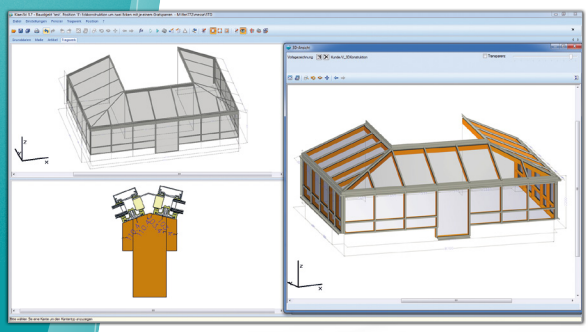

Klaes 3D is based on a highly flexible and open data concept that integrates individual solutions and custom construction methods. You can store your own profile systems and construction details or use existing master data packages and adjust them to your individual requirements.

Once you have defined a solution you can use it in all your constructions again and again since they are automatically adjusted to the current angle and dimension situations. Details can be developed step by step in the master data and you can review the visually processed result instantaneously.

The integrated 2D Klaes CAD allows you to combine and arrange sectional and detail drawings and add joint drawings.

Klaes 3D provides the proper solution for all materials: aluminum, timber, timber-aluminum as well as PVC systems can be combined individually.

Image: Steinbach

# Your answer to the challenges of the market

The versatile tool is that Klaes 3D not only provides you with extensive possibilities of planning your projects but also with an answer to the questions of a tough competition and increasingly demanding customers raise.

The various types of conservatories and facades are tagged with all required dimensions and angles by Klaes 3D. All surfaces can be divided freely and they are provided with recesses for existing building structures (walls, chimneys etc.).

Windows-, sliding door- and door elements can easily be inserted and they adjust themselves automatically to the existing construction. Complex designs or special solutions, you can easily import as CAD grid model into Klaes 3D.

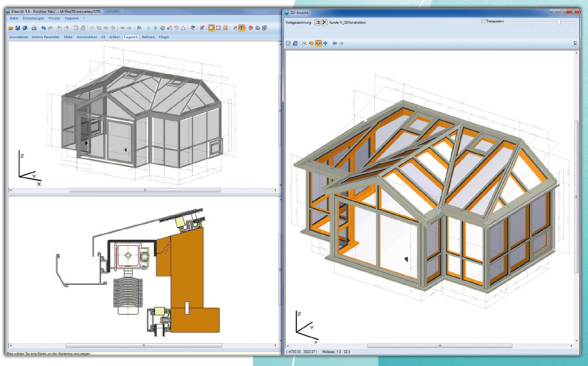

Individually dimensioned 3D elevations provide producers, architects and end customers with all the important information they need.

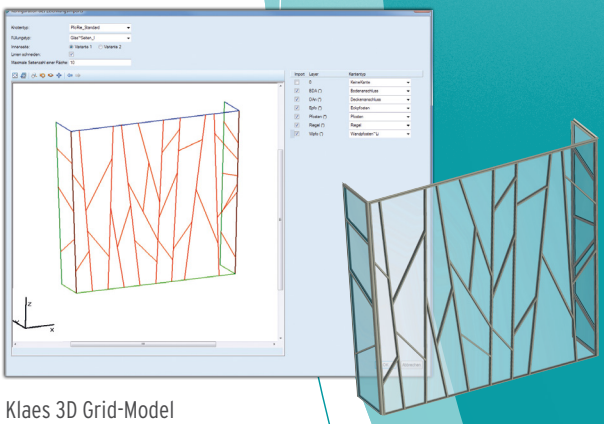

Klaes 3D Grid-Model

Image: Renaltner ▲

Image: Alco ▲

Klaes 3D

# What Counts is What Comes Out!

Klaes 3D provides all manufacturing documents. In addition to exact cut lists for timber-, alu- or PVC profiles, Klaes 3D generates also perfect end plate lists as well as glass order lists for all forms of glass.

All lists are customized to meet your needs. The batch printing function allows you to easily print the documents for the end customer, the architect, the construction application or the manufacturing.

Through the ide al interconnection of Klaes 3D with Klaes CAM, you can control your timber CNC machines directly from Klaes 3D in order to manufacture everything rationally. There are only three components: Machine, tool and ONE Software.

You can see all processes on the screen in an original true 3D view. These processes from Klaes 3D are optimally prepared with Klaes CAM for your manufacturing.

With Klaes CAM you can control almost all timber CNC-machines, regardless of construction type, clamps- or suction cups systems. Klaes CAM creates the CNC-machine programs on the basis of default settings automatically – which can be manually changed, too. For each processing type, you can make adjustments to the aggregate, the used tool, the arrival- and departure conditions as well as further work-specific parameters. Klaes is the perfect solution to achieve an equally high product quality on a CNC-machine with the high data quality of Klaes 3D conservatory- and façade constructions.

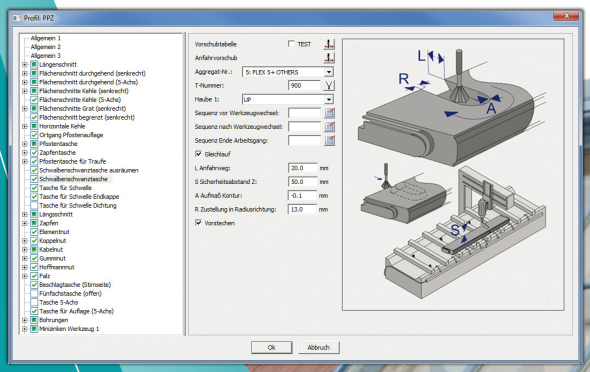


Klaes CAM Machining

Image: Renaltner ▲

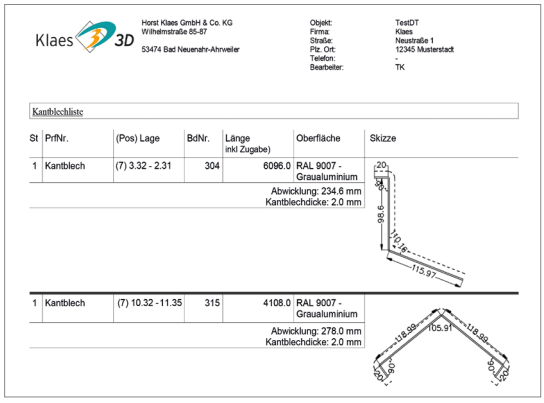

Horst Klaes GmbH & Co. KG
Wilhelmstraße 85-87
53474 Bad Neuenahr-Ahrweiler

| | |
|---|---|
| Objekt: | TestDT |
| Firma: | Klaes |
| Straße: | Neustraße 1 |
| Plz. Ort: | 12345 Musterstadt |
| Telefon: | - |
| Bearbeiter: | TK |

Kantblechliste

| St | PrfNr. | (Pos) Lage | BdNr. | Länge inkl Zugabe) | Oberfläche | Skizze |
|---|---|---|---|---|---|---|
| 1 | Kantblech | (7) 3.32 - 2.31 | 304 | 6096.0 | RAL 9007 - Graualuminium | 20, 34, 98.6, 110.16, 115.97 |
| | | | | | Abwicklung: 234.8 mm<br>Kantblechdicke: 2.0 mm | |
| 1 | Kantblech | (7) 10.32 - 11.35 | 315 | 4108.0 | RAL 9007 - Graualuminium | 118.99, 105.91, 118.99, 50, 50, 50, 50 |
| | | | | | Abwicklung: 278.0 mm<br>Kantblechdicke: 2.0 mm | |

Edge plate order list

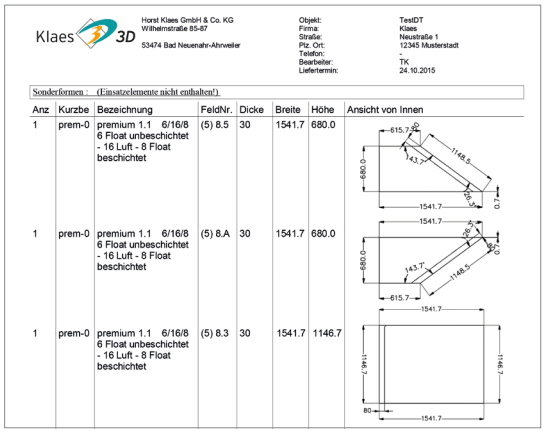

Horst Klaes GmbH & Co. KG
Wilhelmstraße 85-87
53474 Bad Neuenahr-Ahrweiler

| | |
|---|---|
| Objekt: | TestDT |
| Firma: | Klaes |
| Straße: | Neustraße 1 |
| Plz. Ort: | 12345 Musterstadt |
| Telefon: | - |
| Bearbeiter: | TK |
| Liefertermin: | 24.10.2015 |

Sonderformen : (Einsatzelemente nicht enthalten!)

| Anz | Kurzbe | Bezeichnung | FeldNr. | Dicke | Breite | Höhe | Ansicht von Innen |
|---|---|---|---|---|---|---|---|
| 1 | prem-0 | premium 1.1 6/16/8 6 Float unbeschichtet - 16 Luft - 8 Float beschichtet | (5) 8.5 | 30 | 1541.7 | 680.0 | 615.7, 143.7, 1148.5, 680.0, 1541.7, 0 |
| 1 | prem-0 | premium 1.1 6/16/8 6 Float unbeschichtet - 16 Luft - 8 Float beschichtet | (5) 8.A | 30 | 1541.7 | 680.0 | 1541.7, 615.7, 143.7, 1148.5, 680.0, 1541.7 |
| 1 | prem-0 | premium 1.1 6/16/8 6 Float unbeschichtet - 16 Luft - 8 Float beschichtet | (5) 8.3 | 30 | 1541.7 | 1146.7 | 1541.7, 1146.7, 80, 1541.7 |

Glass list with stepped glass

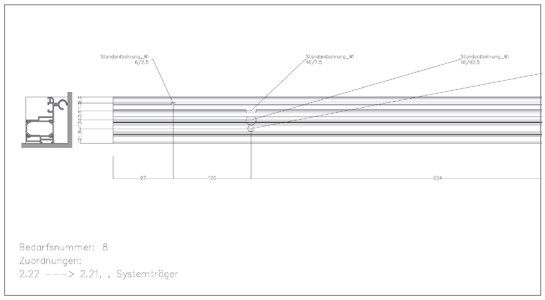


3D control of CNC-processings

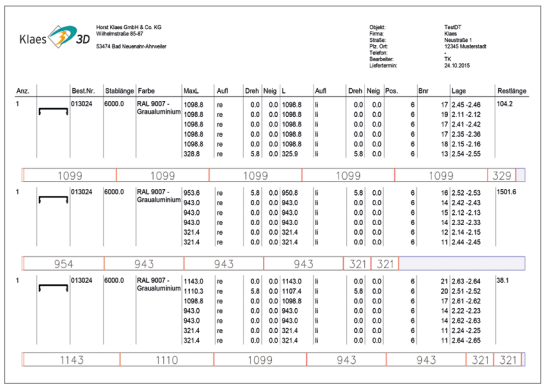

Horst Klaes GmbH & Co. KG
Wilhelmstraße 85-87
53474 Bad Neuenahr-Ahrweiler

| | |
|---|---|
| Objekt: | TestDT |
| Firma: | Klaes |
| Straße: | Neustraße 1 |
| Plz. Ort: | 12345 Musterstadt |
| Telefon: | - |
| Bearbeiter: | TK |
| Liefertermin: | 24.10.2015 |

| Anz. | | Best.Nr. | Stablänge | Farbe | MaxL | Aufl | Dreh | Neig | L | Aufl | Dreh | Neig | Pos. | Bnr | Lage | Restlänge |
|---|---|---|---|---|---|---|---|---|---|---|---|---|---|---|---|---|
| 1 | | 013024 | 6000.0 | RAL 9007 - Graualuminium | 1098.8 | re | 0.0 | 0.0 | 1098.8 | li | 0.0 | 0.0 | 6 | 17 | 2.45 -2.46 | 104.2 |
| | | | | | 1098.8 | re | 0.0 | 0.0 | 1098.8 | li | 0.0 | 0.0 | 6 | 19 | 2.11 -2.12 | |
| | | | | | 1098.8 | re | 0.0 | 0.0 | 1098.8 | li | 0.0 | 0.0 | 6 | 17 | 2.41 -2.42 | |
| | | | | | 1098.8 | re | 0.0 | 0.0 | 1098.8 | li | 0.0 | 0.0 | 6 | 17 | 2.35 -2.36 | |
| | | | | | 1098.8 | re | 0.0 | 0.0 | 1098.8 | li | 0.0 | 0.0 | 6 | 18 | 2.15 -2.16 | |
| | | | | | 328.8 | re | 5.8 | 0.0 | 325.9 | li | 5.8 | 0.0 | 6 | 13 | 2.54 -2.55 | |
| 1099 | | 1099 | | | 1099 | | | | 1099 | | | | 1099 | | | 329 |
| 1 | | 013024 | 6000.0 | RAL 9007 - Graualuminium | 953.6 | re | 5.8 | 0.0 | 950.8 | li | 5.8 | 0.0 | 6 | 16 | 2.52 -2.53 | 1501.6 |
| | | | | | 943.0 | re | 0.0 | 0.0 | 943.0 | li | 0.0 | 0.0 | 6 | 14 | 2.42 -2.43 | |
| | | | | | 943.0 | re | 0.0 | 0.0 | 943.0 | li | 0.0 | 0.0 | 6 | 15 | 2.12 -2.13 | |
| | | | | | 943.0 | re | 0.0 | 0.0 | 943.0 | li | 0.0 | 0.0 | 6 | 14 | 2.32 -2.33 | |
| | | | | | 321.4 | re | 0.0 | 0.0 | 321.4 | li | 0.0 | 0.0 | 6 | 12 | 2.14 -2.15 | |
| | | | | | 321.4 | re | 0.0 | 0.0 | 321.4 | li | 0.0 | 0.0 | 6 | 11 | 2.44 -2.45 | |
| 954 | | 943 | | | 943 | | | | 943 | | 321 | 321 | | | | |
| 1 | | 013024 | 6000.0 | RAL 9007 - Graualuminium | 1143.0 | re | 0.0 | 0.0 | 1143.0 | li | 0.0 | 0.0 | 6 | 21 | 2.63 -2.64 | 38.1 |
| | | | | | 1110.3 | re | 5.8 | 0.0 | 1107.4 | li | 5.8 | 0.0 | 6 | 20 | 2.51 -2.52 | |
| | | | | | 1098.8 | re | 0.0 | 0.0 | 1098.8 | li | 0.0 | 0.0 | 6 | 17 | 2.61 -2.62 | |
| | | | | | 943.0 | re | 0.0 | 0.0 | 943.0 | li | 0.0 | 0.0 | 6 | 14 | 2.22 -2.23 | |
| | | | | | 943.0 | re | 0.0 | 0.0 | 943.0 | li | 0.0 | 0.0 | 6 | 14 | 2.62 -2.63 | |
| | | | | | 321.4 | re | 0.0 | 0.0 | 321.4 | li | 0.0 | 0.0 | 6 | 11 | 2.24 -2.25 | |
| | | | | | 321.4 | re | 0.0 | 0.0 | 321.4 | li | 0.0 | 0.0 | 6 | 11 | 2.64 -2.65 | |
| 1143 | | 1110 | | | 1099 | | | | 943 | | | | 943 | | | 321 321 |

Optimized cut list

Klaes 3D

Besides Klaes ***3D***
there exists the other innovative
solutions from Klaes:

Klaes ***premium***
The total integrated solution in one package

Klaes ***professional***
The comprehensive solution for all (window)
companies with automated production

Klaes ***vario***
The flexible entry-level solution

Klaes ***trade***
The innovative solution for window traders

Klaes ***IT-Lösungen***
For the construction and installation
of your I.T. infrastructure

KLAES
WORLDWIDE NO. 1
enjoy iT

Horst Klaes GmbH & Co. KG
Wilhelmstr. 85-87 | 53474 Bad Neuenahr-Ahrweiler
Fon: +49 (2641) 909 - 0 | Fax: +49 (2641) 909 - 2000
http://www.klaes.com | E-Mail: welcome@klaes.com